Engineering & Computer Science Orientation

Version 3.0 printed in January, 2019
First published on March 2012

Background and Acknowledgements

This text is prepared for Engineering and Computer Science (ECS) Orientation Course. The goal is to provide an overview of the Engineering and Computer Science fields including education paths, careers, creative problem solving, success factors and available resources.

You are invited to submit corrections, additional topics, examples and problems to be included in future updates.

Thanks,
Izad Khormaee

Copyright 2012 Izad Khormaee, All Rights Reserved.

Contents

Contents

1. Introduction 4
   1.1. Education Levels 4
   1.2. Fields of Engineering and Computer Science 5
   1.3. Guide to Engineering & Computer Science 6
   1.4. AST2 Degree and Course Requirements 7
   1.5. Team Formation 8
2. Industry Research 9
   2.1. Sources of Industry Information 9
   2.2. Select and Research Three Companies 10
   2.3. Preparing and Presenting 10
3. Company Research 11
   3.1. Company In-depth Research 11
   3.2. Preparing and Presenting 11
4. Problem Solving 12
   4.1. 5-Step Creative Problem Solving 12
   4.2. Application of 5-Step Creative Problem Solving 13
5. Mechanical Project 14
   5.1. Introduction to Gravity/Physical Force 14
   5.2. Experiment –Tower 14
   5.3. Demonstration 14
6. Electrical Project 15
   6.1. Introduction to Electromagnetic Force 15
   6.2. Experiment –Elevator 16
   6.3. Demonstration 16
7. Computer Science Project 17
   7.1. Introduction to Scratch Development Environment 17
   7.2. Experiment – One Minute Story 17
   6.3. Demonstration 17
8. Internship 18
   8.1. Resume 18
   8.2. Interviewing 19
9. Engineering and Computer Science Orientation Course Retrospective 20

1. Introduction

Engineering and Computer Science (ECS) Orientation is intended to provide an overview of engineering and computer science fields. Initially, the goal is to provide information on educational requirements and brainstorms possible specialties within ECS. In the next segment, students have opportunities to research their field of interest and exchange their view with peers. Students will also have opportunities to explore some key scientific principles and use them to implement solutions using the creative problem solving approach. Finally, a brief discussion of internship including resume writing and interviewing process are provided.

This course requires student participation for optimal outcome and what a student learns will be proportional to his/her investment of time and focus.

1.1. Education Levels

The Engineering and Computer Science educational levels can be best described in two-year intervals following the completion of high school. The following diagram shows the degrees attained after approximately each two-year increment and entry points into the marketplace:

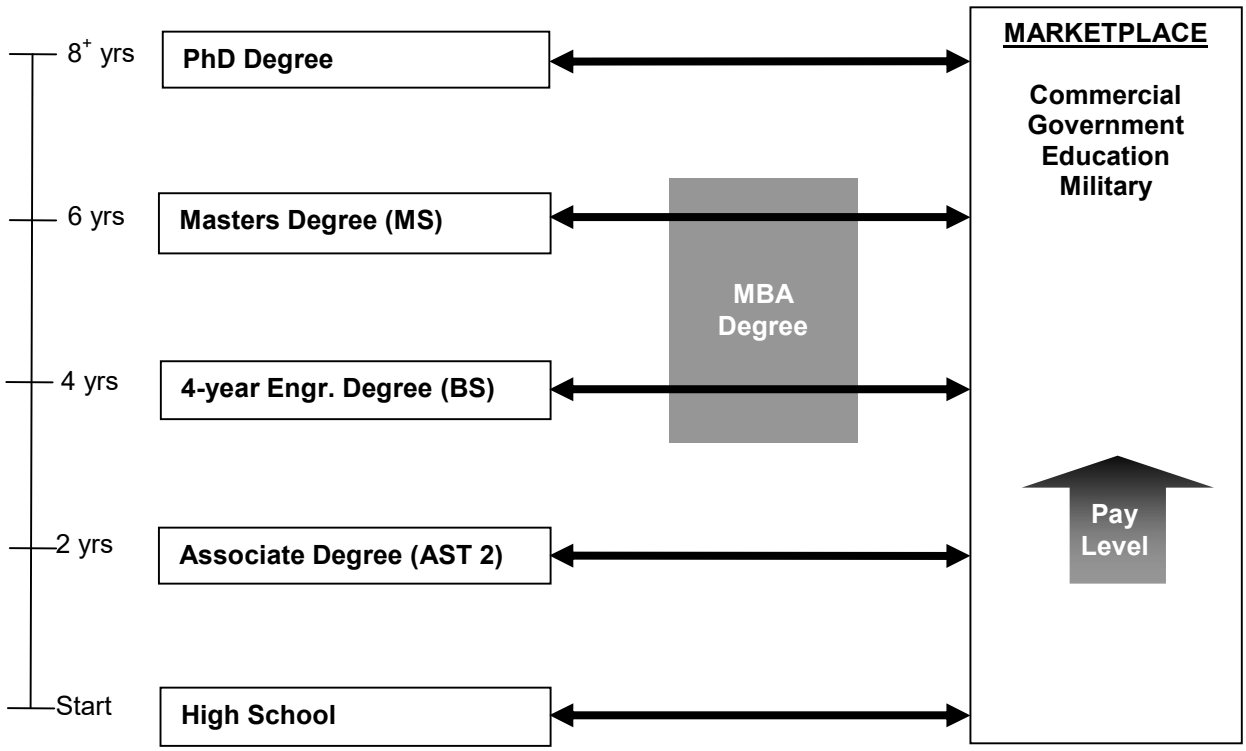

The program at a community college such as Clark covers the first two years of post high school studies, resulting in an Associate Degree. At Clark College, the Associate Degree designed for all engineering and computer science is referred to as Associate of Science Transfer – Track 2 (AST2).

1.2. Fields of Engineering and Computer Science

Engineering and Computer Science professionals are in every industry with hundreds of subspecialties. The following lists the most common fields:

- Aerospace Engineering
- Bio Engineering
- Bio Informatics
- Chemical Engineering
- Civil Engineering
- Computer Engineering
- Computer Science
- Electrical Engineering
- Environmental Engineering
- Industrial Engineering
- Information Technology
- Mechanical Engineering
- Nuclear Engineering
- Pulp & Paper Engineering
- Reusable Engineering
- Structural Engineering
- Systems Engineering

Assignment

1) Can you think of any field that is not listed above?

2) Find the field that you are interested in perusing from the above list.

1.3. Guide to Engineering & Computer Science

The following flow chart outlines the decision process for identifying the first course to take in your field, and also identifies the faculty advisor who can help prepare your education plan:

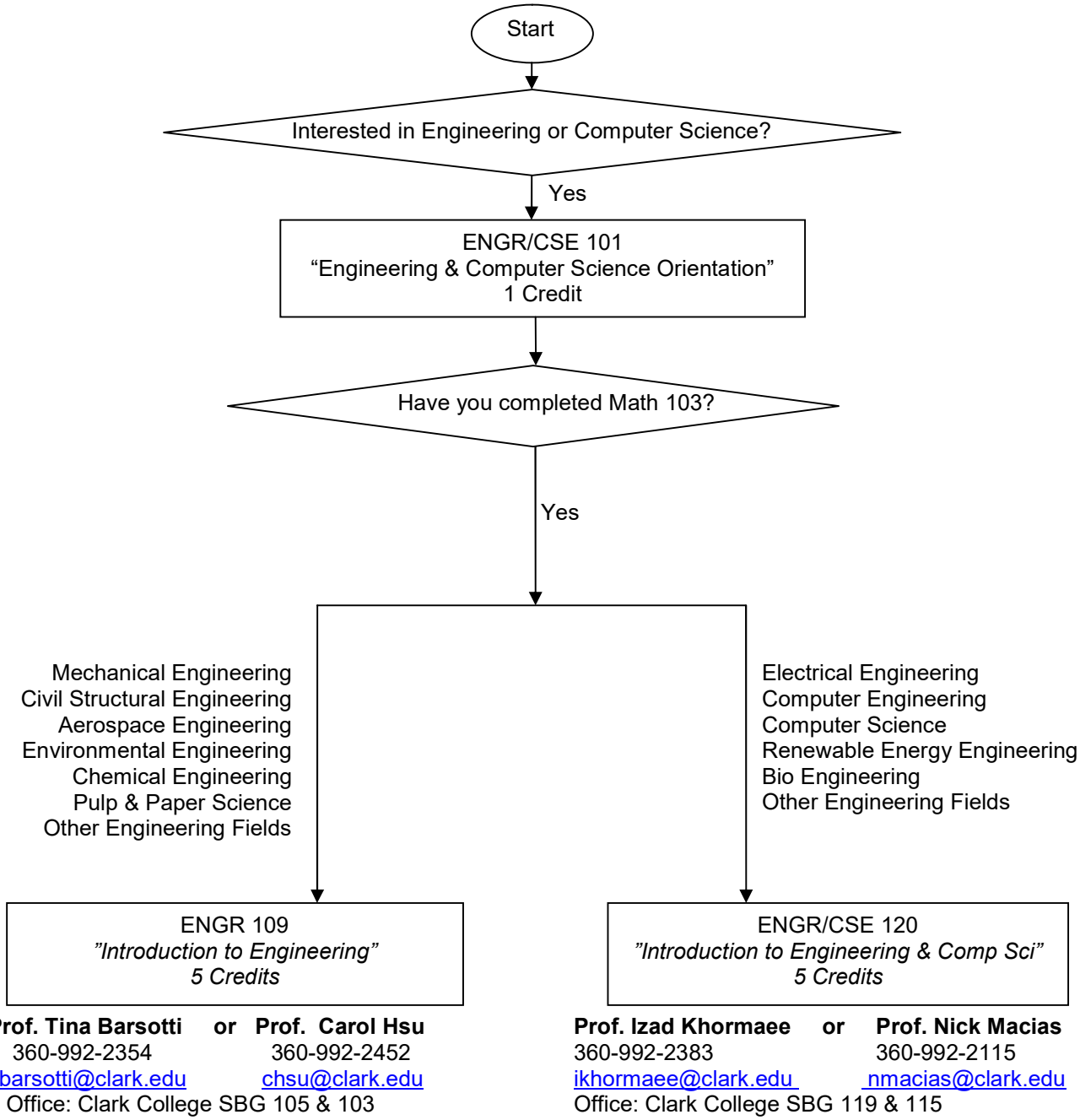

Prof. Tina Barsotti or **Prof. Carol Hsu**
360-992-2354 360-992-2452
cbarsotti@clark.edu chsu@clark.edu
Office: Clark College SBG 105 & 103

Prof. Izad Khormaee or **Prof. Nick Macias**
360-992-2383 360-992-2115
ikhormaee@clark.edu nmacias@clark.edu
Office: Clark College SBG 119 & 115

Assignment

Students are **required** to meet with one of the above Engineering and Computer Science Advisors **as soon as possible** in order to develop an educational plan. If you are unable to reach an Advisor, visit www.EngrCS.com/advise.

1.4. AST2 Degree and Course Requirements

Associate of Science Transfer – Track 2 (AST-2) is designed for students interested in pursuing an education and career in Engineering or Computer Science. The following AST-2 program outline is provided as an overview. As mentioned in the previous section, Students are encouraged to meet with one of the faculty advisors in order to complete an educational plan.

	BioE	ChE	CivE	ComE	CS	EE	ME	NucE	
Communication [5 Cr]									
ENGL & 101	R	R	R	R	R	R	R	R	
Quantitive Skills [15 Cr]									
MATH &151-3, 254	R	R	R	R	R	R	R	R	
MATH 205					R				
MATH 215	R	R	R	R	R	R	R	R	R
MATH 221	R	R		R		R	R	R	R
Humanities & Social Science [15 Cr]									
ECON & 202	R	R	R	R	R	R	R	R	
Hum (5 cr)	R	R	R	R	R	R	R	R	
Social & Hum(5 cr)	R	R	R	R	R	R	R	R	
Science [15 Cr.]									
BIOL&221-3	R								
CHEM&141/151	R	R	R	R	R	R	R	R	
CHEM&142/152	R	R	R				R	R	
CHEM&143/153	R	R					R	R	
CHEM&241-3/251-3		R							
PHYS&2xx	R	R	R	R	R	R	R	R	
Computer Science [5 Cr]									
CSE 121	R	R	R	R	R	R	R	R	
CSE 222-4					R				
Engineering Electives [19-27 Cr]									
ENGR/CSE 101	O	O	O	O	O	O	O	O	
ENGR 109	O	O	R				R	O	
ENGR& 114			R				R		
ENGR/CSE 120	O	O		R	R	R		O	
ENGR 140			R				R		
ENGR 150							R		
ENGR & 204	R	O	O	R		R		O	
ENGR 252 & 253				R		R			
ENGR 250 & 270				R	R	R			
ENGR&214,	R	R	R				R	O	
ENGR&215, 225			R				R	O	
ENGR &224	O	O				O	O	O	

Notes:

1. "R" is required; "O" is Optional
2. The results of Compass Test determine which Math, English and Chemistry class to start with. Prep courses: ENGL 97 & 98; Math 030, 090, 095, 103 & 111; CHEM&139.

1.5. Team Formation

Most of the learning and activities in this course are performed as a team- just the same as in professional engineering and computer science projects and organizations. The teams will be organized based on areas of interest.

Below are the recommended process steps for forming teams:

1) Each student should write the following information on a Post-It note and place it on the white board:
   a) Name
   b) Area of interest (if not sure, pick one for now)

2) The instructor organizes teams by grouping students with same or similar fields of interest into teams of 3 to 6 students.

3) Team members shall move to where they are able to meet as a team in order to introduce themselves. Each team member should obtain the following information from their teammates:
   a) Name (first and last name)
   b) Email or other preferred contact information
   c) Area of interest

2. Industry Research

As discussed earlier, engineers and computer professionals work in every industry. In the next two sections, each team researches one or more industry to gain a better understanding of requirements and opportunities. Each team selects three companies by researching the industry and companies of interest. In the following section sections, tools and processes are also introduced to support the industry research.

2.1. Sources of Industry Information

Although online sources are readily available, there are other sources that can support your research. The following three areas are worthwhile sources to consider during your research and exploration of the industry, company and fields of interest.

College/University

- Faculty Advisor
- Clark College website (www.clark.edu)
- Destination University Websites (www.WSU.edu, www.pdx.edu, www.Washington.edu, …)
- Companies and organizations in the field of interest (Website)

Online

- Google.com/finance , Yahoo.com/finance and others
- Google.com/patent
- Washington Occupational Info. Services (WOIS) available through Clark College Library (http://library.clark.edu/?q=engr_101_khormaee)
- Wikipedia (http://www.wikipedia.org/)
- Oregon Career Information System (CIS) available online. (oregoncis.uoregon.edu/)
- Clark College Career Center (http://www.clark.edu/career_workforce/)

Networking

- Professional Association (ECS Club, IEEE, …)
- Community groups
- Field-specific tradeshows
- Work experience

Assignment

1) Explore of the sources of information listed above and evaluate their effectiveness.

2) As a team, brainstorm at least three additional sources of information on the industries or companies.

2.2. Select and Research Three Companies

(Time Allocation: 60 minutes)

Each team selects three companies that they would be most interested in working for uponr completing their Bachelor's degree. Use the resources from the earlier section to research these three companies with the goal of producing:

- A prioritized list of the three companies based on level of interest.
    - A given company should be covered only by one team
    - In the case of a large company with diverse services and products, the team should pick only one service or product line to focus on.
- For each of the companies selected, identify two examples of projects/products/services that would be interesting to work on.
- An explanation of why these three companies were selected and their ranked prioritization.

2.3. Preparing and Presenting

Each team shall prepare a presentation in PowerPoint based on the results from the previous section and upload it to Canvas. The presentation should be about five minutes. The presentation should start with title slide (title, company names, team members names) followed by one slide per selected company. Each selected company slide should include:

- Company name
- Headquarter and major facilities location
- Two projects/products/services of interest
- Reasons for selecting the company

3. Company Research

Each team should select one of the three companies from earlier list to perform an in-depth analysis. The next two sections will outline the expected research and presentation from the team's work.

3.1. Company In-depth Research

(Time Allocation: 60 minutes)

Each team is expected to perform an in-depth analysis on the selected company; the resulting research and analysis should includes at least the following:

- Company Potential
  - Market/Financial based Trends
  - Current Products / Services
  - Types of Engineers Employed
  - Competitors

- Job Potential
  - Project Types
  - Roles and Responsibilities
  - Qualifications and Requirements

3.2. Preparing and Presenting

Each team shall prepare a 15-minute PowerPoint presentation and upload it to Canvas. The presentation is an opportunity for both the audience and presenters to broaden their understanding of the selected company.

The only formatting requirement is to have a title slide which includes the title, company names and team member's name.

4. Problem Solving

Engineers are responsible for utilizing the existing mathematics and science knowledge to develop ideas that offer better solutions to societal problems (more efficient, lower cost, faster, more reliable, …) than existing solutions. In this role, engineers or computer professionals are continually engaged in **creative** problem solving. The word "creative" comes from the fact that the solutions need to be better than the existing solutions.

Although there are a number of variations on creative problem solving approaches, all of these approaches share some variation of the steps in the 5-Step Creative Problem Solving outline below.

4.1. 5-Step Creative Problem Solving

5-Step Creative Problem Solving ensures that the problem is clearly understood and that the more obvious solutions are defined prior to deciding which optimal solution(s) to pursue. The following diagram outlines the steps of the Five Step Creative Problem Solving process:

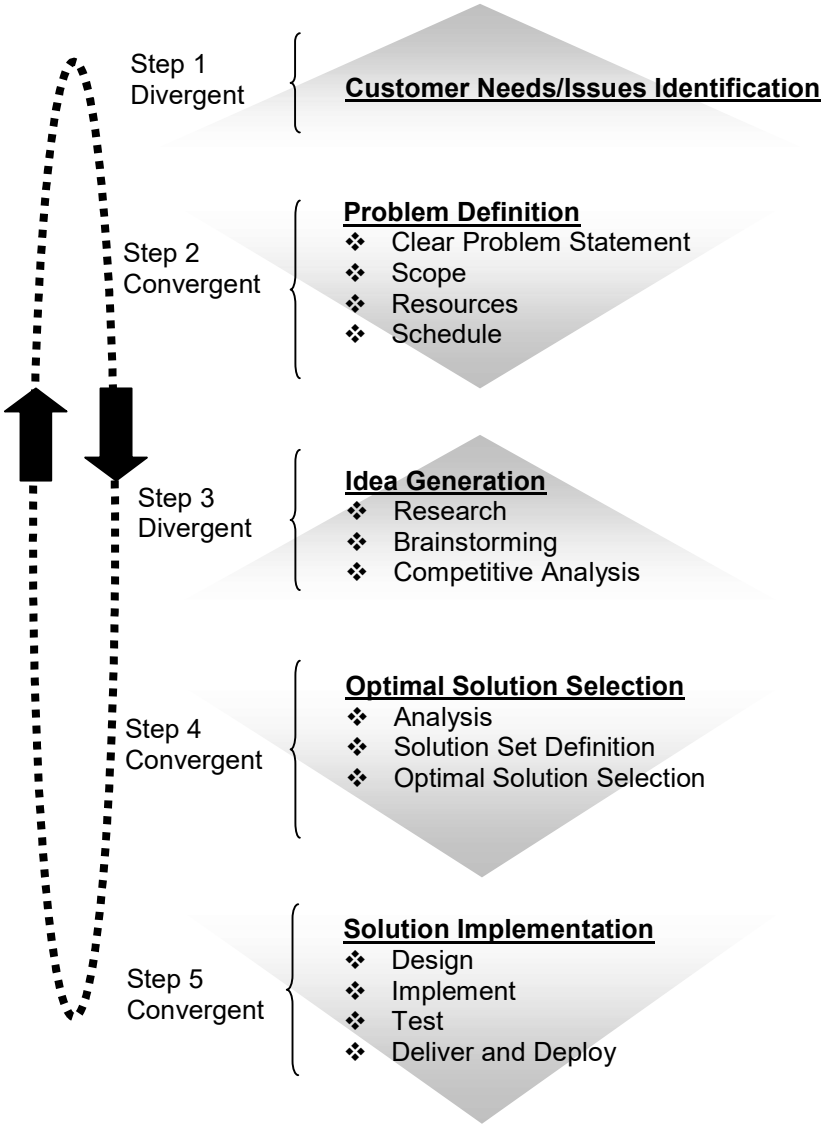

4.2. Application of 5-Step Creative Problem Solving

(Time Allocation: 60 minutes)

The best way to understand the application of problem solving is to pick an existing societal problem or customer need and apply the 5-Step Creative Problem Solving process. This may be a team or whole class exercise depending on the preferences of students and instructor.

The following table is provided to help capture the progress on selecting a problem/need and developing optimal solutions:

Step 1. Customer Need	
Step 2. Problem Definition Clear Problem Statement Scope of the Problem Allocated Resources Schedule (phases and dates)	
Step 3. Idea Generation Research Brainstorming Competitive Analysis	
Step 4. Optimal Solution Selection Analysis Solution Set Definition Selection Optimal Solution Recommendation	
Step 5. Solution Implementation Design Implement Test Deliver and Deploy	*"Not typically covered in this class exercise."*

5. Mechanical Project

Many fields of engineering such as civil, aerospace and mechanical are focused on understanding the materials and forces that are exerted on these materials as well as the effect of gravitational forces. This section presents an experiment in an attempt to demonstrate the interplay of material and various forces.

5.1. Introduction to Gravity/Physical Force

For this discussion, the simplifying assumption is that materials are rigid (will not bend under force) and also that our structure is not moving (static). Even without the use of mathematics and science, we intuitively understand that all material on earth is under a downward gravitational force. Using mathematics and science, we could quantify the force applied to any object and its supporting members.

For the purpose of the next experiment, we will attempt to design the towers using an empirical approach. (build, test, modify, re-test).

5.2. Experiment –Tower

Using only the resources specified below, develop the highest tower possible that can hold a ping pong ball on top. The tower must be free standing without any external interference or support.

Resources

- 10 strands of spaghetti pasta
- 2' of masking tape
- One ping pong ball

Schedule

- 20 minutes to experiment and design
- 45 minutes to build, test and modify iteration

Scope

- Build the tower and demonstrate it.

Basic Science

- Gravity force
- Material strength and flexibility

5.3. Demonstration

Each team will set up their optimal solution with the ping pong ball on top. The team with the highest tower will be the winner of the competition.

Additionally, each team should be ready to discuss the alternative solutions considered, and what criteria were used to select the optimal solution.

6. Electrical Project

Many fields of engineering such as Electrical, Energy, Bio, Computer and others are focused on utilizing the knowledge of electromagnetism to create solutions that solve societal problems. This section presents an experiment that attempt to demonstrate the use of electromagnetism in one application.

6.1. Introduction to Electromagnetic Force

Electric force and magnetic force are two different forces, but since they are able to interact with each other and have similar characteristics, they are collectively referred to as electromagnetic forces. Humans are unable to directly sense Electromagnetic fields and forces eventhough they are all around us. The following diagrams attempt to outline the electromagnetic fields which forces will be perpendicular to.

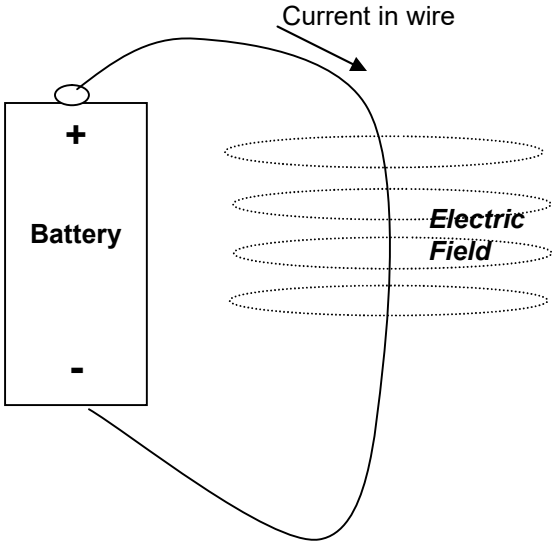

Electric field circles the wire as the current runs through it. There is also an electric force that is perpendicular to the field. Even though we cannot feel it, other electromagnetic forces react to this force.

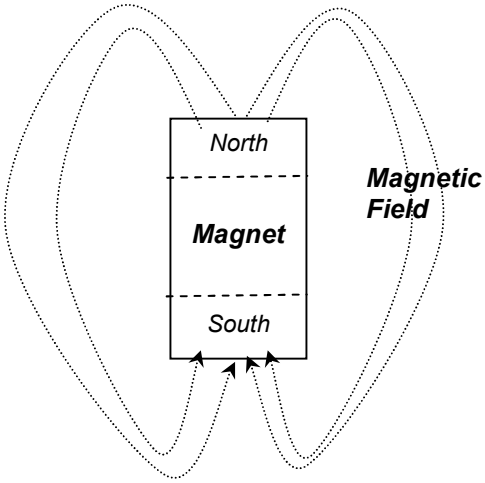

Magnetic field comes out of North Pole and goes into the South Pole of magnet. There is also a magnetic force that is perpendicular to the field. Even though we cannot feel it, other electromagnetic forces react to this force.

Electromagnetic forces have been known for a long-time and have been employed to create highly useful solutions. One of those usages is to build a motor by creating a system where the magnetic and electric forces are allowed to push against each other to create motion.

6.2. Experiment –Elevator

Using only the specified resources, develop an elevator mechanism to raise the lower end of a string by as much as possible in one minute. The elevator must be free-standing without any external interference or support.

Resources

- 5 sheets of 8.5x11” white copy paper
- 2’ of masking tape
- One nail (approx. 1” long and 0.1” diameter)
- Wire (approx.. 1’ of approx. 28 gauge)
- Battery (one AA)
- Magnet (one .5” diameter neodymium Magnet)
- String (3’)

Schedule

- 20 minutes to experiment and design
- 45 minutes to build, test and modify iteration

Scope

- Build the elevator and demonstrate it.

Basic Science

- Electromagnetic fields and resulting forces

6.3. Demonstration

Each team will set up their optimal elevator solution, and demonstrate the elevator operation. The elevator which raises the lower end of the string by 3 feet the fastest will be the winner of the competition.

Additionally, each team should be ready to discuss the alternative solutions considered, and what criteria were used to select the optimal solution.

7. Computer Science Project

Computers are an integral part of every industry. Modern humans are constantly interacting with computers in a variety of forms such as portable or desktop computers to embedded systems that you may find in a car or microwave. Computer science (programming, software engineering, etc.) is the development of instructions or programs to guide the operation of computers and interact with users.

7.1. Introduction to Scratch Development Environment

Scratch Development Environment is a graphical programming environment designed to create stories, games and animations. The Scratch Getting Started Guide is available at the following link:

http://www.engrcs.com/tools_programs/ScratchGettingStartedv14.pdf

Scratch is free and may be downloaded from the following link:

http://www.engrcs.com/tools_programs/ScratchInstaller1.4.exe

Additional information and versions of Scratch are available on the developer site at the following link:

http://scratch.mit.edu/

7.2. Experiment – One Minute Story

Develop a one-minute story program/animation using the Scratch Graphical/Animation Development Environment.

Resources

- Scratch Graphical/Animation Development Environment and tutorial available at www.engrcs.com tool section http://www.engrcs.com/tools_programs/tp_index.php.
- Other online and offline resources.
- Your imagination!

Schedule

- 20 minutes to experiment and develop the script
- 45 minutes to program the script and test

Scope /Deliverables

- Story script
  Half to full-page describing the story that you plan to program

- Program
  - Upload the story program file generated by Scratch to the Course Canvas age (one upload per team)
  - Present your program to the class.

6.3. Demonstration

Each team is expected to upload the one page story script and the Scratch program to Canvas. Teams will be demonstrating their program for the class and discuss how they would do improve the demoed program if time was allocated for program upgrade (version 2.0).

8. Internship

Engineering and Computer Science professionals are expected to be problem solvers in a highly dynamic and team oriented environment. In addition to academic preparations, the best way to gain knowledge and experience in the field is to work for a technology company. Most companies and government organizations provide internship opportunities for students in engineering and computer science. Internship is an important factor in long-term success of engineering and computer science students.

The good news is that a majority of colleges and universities, including Clark College, have career centers whose Mission is to help students find jobs and internships. This includes support for resume writing and interviewing. Clark College has an excellent Career Center and students are encouraged to take advantage of this free and effective resource. The first step is to visit the Career Center page at www.Clark.edu

Finding and working as a intern are professional activities therefore, it is crucial that the way you talk, dress and behave be professional. That includes the email address you choose (no *#*&!@gmail.com) and cleaning up your social media page. Trying to be funny or cute does not serve you well in this process! Think professional, reliable, team player and effective!

8.1. Resume

A simple search of google.com for "resume templates" provides a long list of formats. You may select the format that best matches your style, qualifications and objectives, but be consistent. In other words, once you have decided on a format, keep the whole resume in the same format. In general, there are three types of resume formats:

- Chronological-Experience-based resumes (most common)
- Functional-Skills-based resumes
- Combination-Combination of skills and work experiences

In preparing an effective paper resume, DO:

- Choose font size and style that are visually appealing and easy to read.
- Include complete contact information at the top of your resume, including your email address.
- Write a clear job target or objective.
- Add knowledge, skills and abilities required for the position.
- Summarize concisely accomplishments in quantitative or results-oriented ways; organize experiences chronically.
- Use "white space" to make it easy to read.
- Limit to a minimum of one page and a maximum of two pages in length.
- Always use "three sets of eyes" (have at least three different people critique your resume).
- Select quality paper & envelop if mailing by postal service.

In writing an effective resume, DO NOT:

- Write "Resume" at the top of your resume.
- Include any personal information such as age, marital status, race, religion, picture, etc.
- Hand-write, cross-out, white out or …
- List addresses, supervisors' names and phone numbers in your "Employment History" section.
- List "References upon Request" on the bottom of your resume.
- List a "Hobbies" section on your resume.
- Spray cologne or perfume on your resume.
- Abbreviate or use acronyms on your resume.

- List reasons for having left a job.

Most companies expect applicants to submit resumes as part of an online form. The online version of your resume should be in text without formatting, and ensures that all key words present in the job posting that apply to you are included. As much as possible, you should use the same terminology as used in the job posting. Most are read by automated systems looking for certain key words and patterns. So your goal is to at least overcome this hurdle and your resume in the hand of the human to evaluate your qualifications.

Remember, the goal of a resume is to get an interview. It is during the interview that your goal is to get the job!

8.2. Interviewing

During the interview, the employer is evaluating you to see if you would be a good fit for his/her current team, and that you will add value to the organization above the cost of your employment. Again, it is important to present yourself as professional, reliable and able to effectively work with teams on new problems.

The best way to prepare for an interview is to research the company to the best of your ability and to think through potential interview questions and your responses. Here are a sampling of potential interview questions:

1) Why are you interested in working for our company and why this particular position?
2) What have you done that you are especially proud of and why?
3) What has been your biggest mistake and how would you do things differently?
4) What are your strengths with respect to this position?
5) What are your weaknesses with respect to this position?
6) Why should we hire you and how will you benefit our company?
7) What is the hardest thing you ever had to overcome and how did you deal with it?
9) Why did you leave your last job?
10) Describe the ideal job for you?
11) What qualities do you look for in a boss?
12) Describe a time when you had to resolve a dispute with or between coworkers.

9. Engineering and Computer Science Orientation Course Retrospective

Your response to this survey is crucial to improve the course. Please take the time to complete the following survey:

1) Number of quarters competed at Clark: _____

2) Area of interest:

☐ME/Civil/AeroE ☐EE/CS/CompE ☐BioE/ChemE/NuclearE ☐Undecided/others

3) Do you currently have an education plan? ☐ Yes ☐ No

If not, why?

_____

4) Which topics were most helpful and why?

_____

5) Which topics were least helpful and why?

_____

6) Do you have any unanswered questions?

_____

_____

7) What else would have been helpful?

_____

_____

8) Additional comments?

_____

_____

_____

Thanks for taking the time to provide us with your perspective!